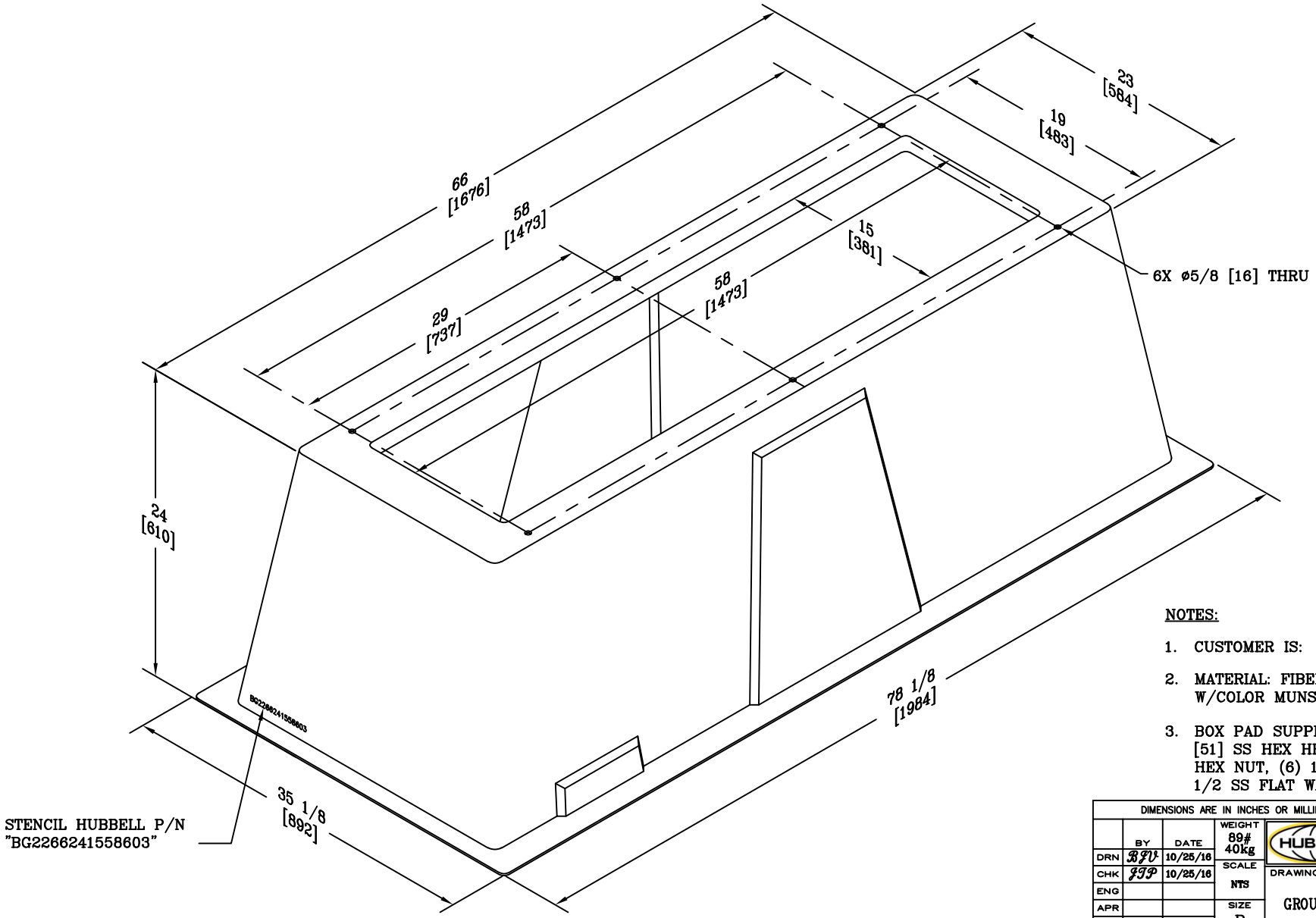

CUSTOMER APPROVAL
APPROVED BY:_____.
DATE:_____.

NOTES:

1. CUSTOMER IS:
2. MATERIAL: FIBERGLASS REINFORCED POLYMER W/COLOR MUNSELL GREEN GEL COAT EXTERIOR.
3. BOX PAD SUPPLIED W/ (6) 1/2-13 UNC X 2 [51] SS HEX HEAD BOLT, (6) 1/2-13 UNC SS HEX NUT, (6) 1/2 [13] SS LOCK WASHER & (12) 1/2 SS FLAT WASHER.

DIMENSIONS ARE IN INCHES OR MILLIMETERS IN BRACKETS UNLESS OTHERWISE NOTED.

	BY	DATE	WEIGHT			LOC
DRN	BJV	10/25/16	89# 40kg	HUBBELL®	3621 INDUSTRIAL PARK DR LENOIR CITY, TN 37771 800-346-3062 www.quazite.com	LC S
CHK	JJP	10/25/16	SCALE NTS	DRAWING DESCRIPTION		REV
ENG				HUBBELL® 22 X 66 X 24 GROUND SLEEVE W/15 X 58 THROAT & (6) ø5/8 THRU HOLES		A
APR			SIZE B			10/16
APR						
ESR OR PROJECT NUMBER 115550				SHEET 1 OF 1	DRAWING NUMBER BG2266241558603	